www.ventilation-system.com

VENTS

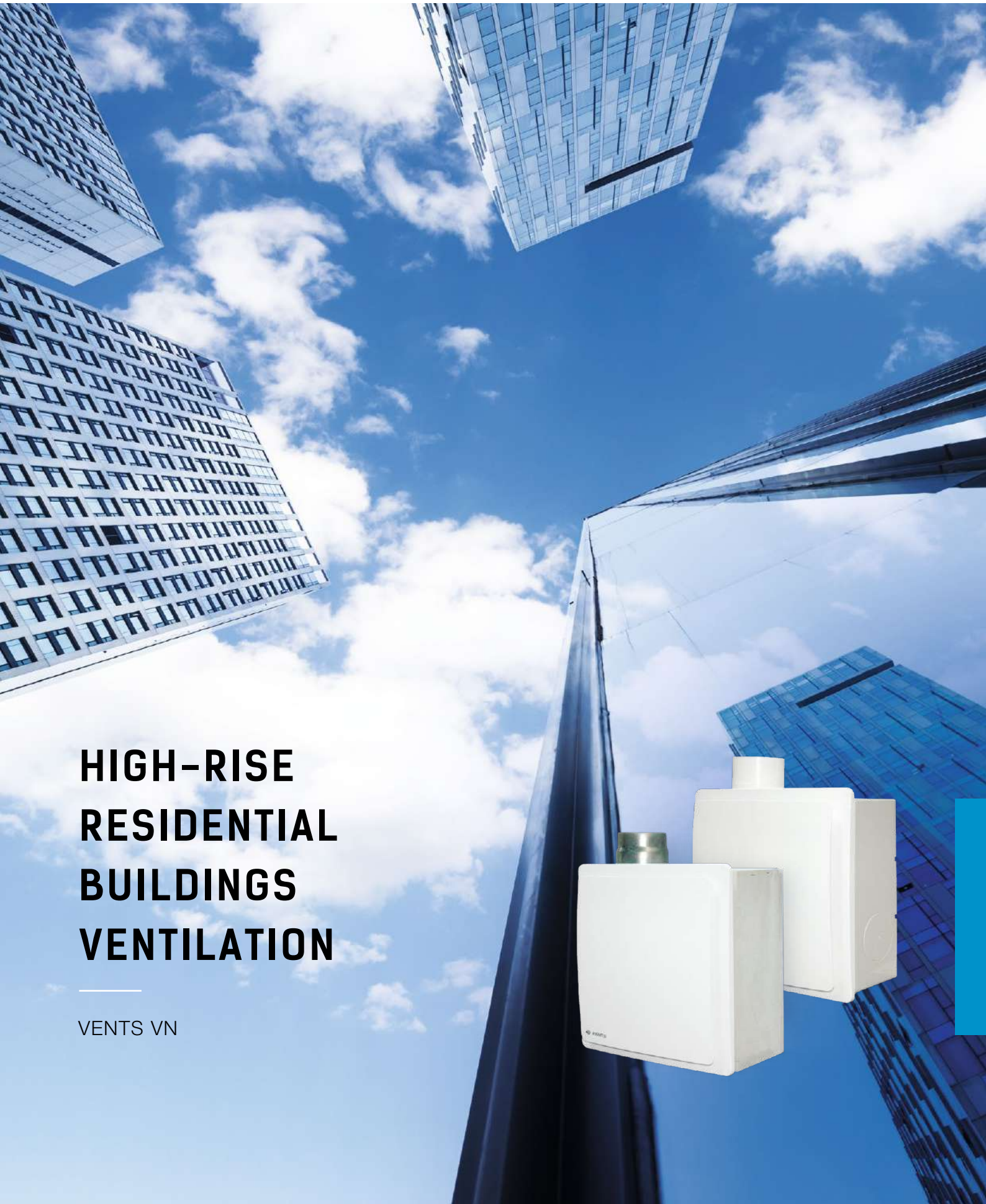

HIGH-RISE RESIDENTIAL BUILDINGS VENTILATION

VENTS VN

CONTENT

4 Ventilation arrangement
6 Fan design
8 Advantages of the VN fan
10 Ventilation system arrangement example
12 Ventilation unit VNV-1 80
16 Fireproof casing for ventilation unit VNV-1 80
18 Plastic casing for VNV-1 80 ventilation unit
20 VNV-1 80 KP fan for flush mounting
24 VNV-1 80 KV fan for flush mounting
28 VNV-1 80 KVK fan for flush mounting
32 VN-1 80, VN 80 fan for wall surface mounting
36 VNV-1 80 K, VN 80 K fan for wall surface mounting
40 Fire-resisting damper PL-10
42 Air shaft calculation in multi-storey buildings
44 Wiring diagrams
46 Certificates

VENTILATION ARRANGEMENT IN RESIDENTIAL HOUSES WITH MONO-PIPE SYSTEM

Fast development and boost of the building industry, new advanced construction technologies have set special requirements not only to the building design but also to the internal engineering systems as water-supply, sewage system and, no doubt, ventilation.

The state-of-the-art high-rise construction demands mechanical and energy-saving ventilation.
Mono-pipe ventilation system that enables air exhaust from several premises through a single ventilation shaft is the most common solution for such application.
Several flats can be connected to one ventilation shaft.

Correct ventilation arrangement is of special importance for flat reconstruction and rearrangements.
The flexible ventilation system is the ideal solution just for such cases. It is designed at the construction stage and meets a number of important requirements such as:

Ensures fire safety

Requires minimum space for mounting

Modern looks

Provides easy control of functions and operating modes

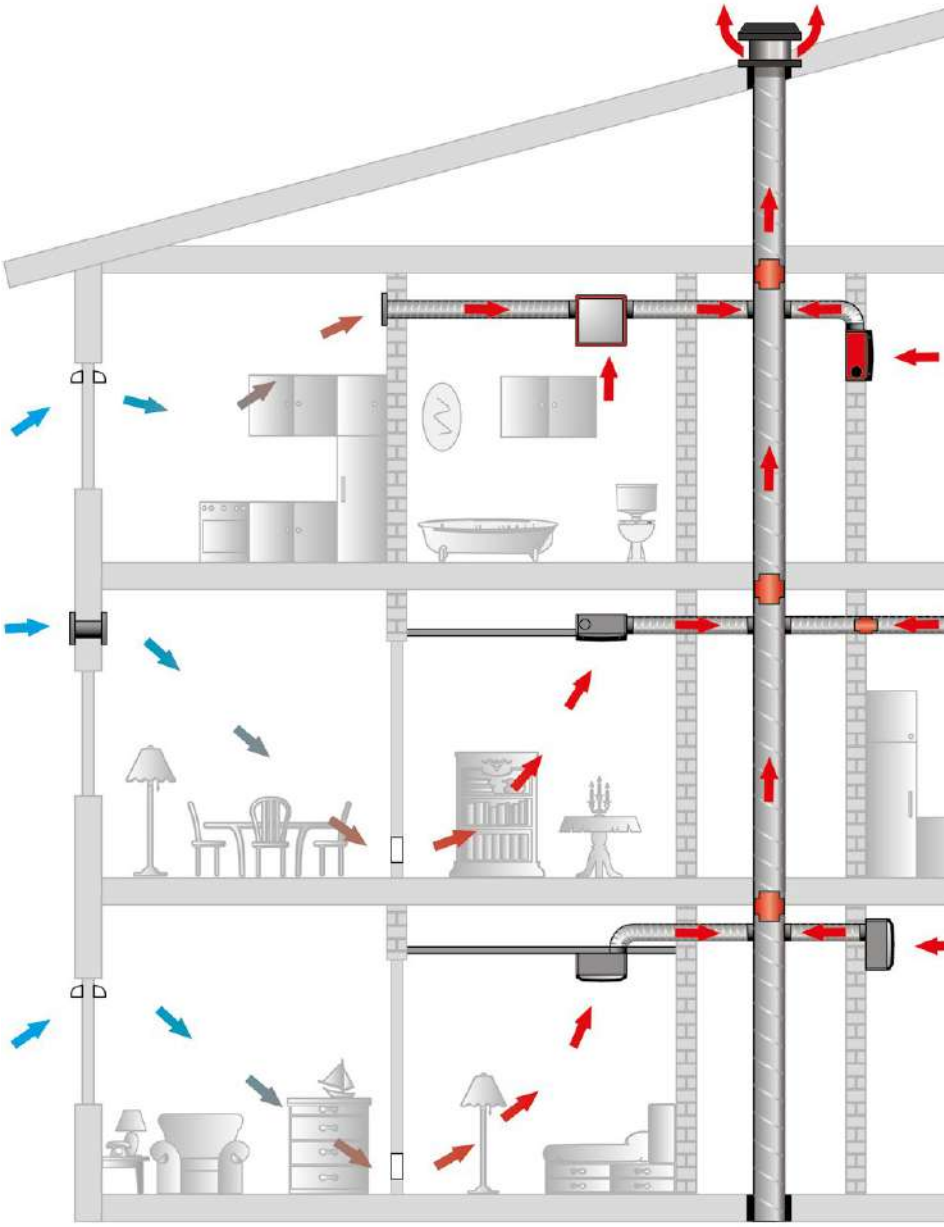

Fresh air intake

Fresh intake air from outside is supplied free of dust with low noise level through intake devices such as window or wall vent to bedrooms and living quarters. The vents are suitable for wall- and window installation and provide air flow regulation.

Extract air removal

The extract air from living premises is removed through kitchen, toilet, bathroom and other non-residential premises into the common exhaust ventilation system by high-efficient VN fans.

Fire prevention

To prevent penetration of fire and smoke through the system air ducts in case of fire the following solutions are used:

1. Fireproof casing.
High fire-retarding characteristics of the casing allow using the fan to meet the increased fire-prevention requirements for high-rise residential construction.

2. Fire-resisting damper.
Installed in the ducts laid out through fireproof walls and ceilings. Fire resistance rating according to EN 1366-2 is EI 120.

Fully compliant with these requirements are VENTS VN fans that combine operating efficiency and fire safety (fan modification in fireproof casing).

FAN DESIGN

FRONT PANEL
The compact design and easy mounting makes the fan match well with any room interior.
Removable panel provides easy access to the filter.

SCROLL CASING
Made of durable ABS plastic.
The unique design provides attaining the best aerodynamic characteristics during the fan operation.
The fan is easily mounted into the casing by means of latches.

FILTER
For protection of the motor, impeller and the assembled air duct from penetration of dust and dirt carried with the air. The filtering element is made from polyether for G4 purification class.

GRILLE
The ornamental grille serves as a front panel of the fan.
The grille design enables easy access to the filter elements and internal part of the fan.

AIRTIGHT BACKDRAFT DAMPER

The backdraft damper is incorporated into the plastic casing to disable air back draft from the main shaft into premises when the fan is not running.

PLASTIC CASING FOR FLUSH MOUNTING TO WALL

Installed into a wall during general construction works.
The casing is made of high-quality durable ABS plastic.
It has additional flanges for connection to branch pipes for adjacent room ventilation.

FIRE-RESISTING DAMPER

Serves to prevent fire and smoke penetration along the air ducts.
As the temperature in the shaft reaches 90 °C the thermal fuse melts and the damper shuts automatically hot air access off. This way the flame and smoke penetration though the ventilation shaft system is prevented.
The damper plate is made of stainless steel.
The fire-resisting damper serves as a backdraft damper when the fan is off and prevents air moving from the ventilation shaft.

FIREPROOF CASING FOR FLUSH MOUNTING TO WALL

Designed to prevent penetration of flame products into the premises in case of fire.
Made of silicate plates manufactured by special calcium silicate technology.
Plates do not contain asbestos, have high mechanical and thermal insulation properties, and are also hygroscopic and vapour permeable, therefore the humidity is regulated by physical parameters of the material.

MOTOR

In order to ensure reliability and durability, an economical two- or three-speed ball bearing motor is used.
The fan can automatically switch to the required capacity depending on the system resistance.
Automatic selection of the best operation mode let save energy considerably.
The impeller has forward curved blades and is dynamically balanced for precise characteristics, low noise level and safe operation while assembly.

PLASTIC CASING FOR WALL SURFACE MOUNTING

Made of high-quality durable ABS plastic and equipped with a backdraft damper.

ADVANTAGES OF THE VN (VNV) FANS

Organized air exchange

Utilization of forced ventilation makes an uncontrolled air flow from the ventilation shaft controlled and manageable.
As an option, fans of the VN (VNV) series can be equipped with speed controllers.

Stable air flow across the entire building height

Fans of the VN series ensure high pressure in the duct system by changing the rotation speed depending on the resistance changes in the system, thereby maintaining volumetric flow rate at the same level.

Fire safety

Fans of the VN (VNV) series are equipped with a fire-resisting damper with fire resistance rating in accordance with the current standards, which excludes the possibility of transferring combustion products through the ventilation duct.

Absence of «backdraft»

Fans of the VN (VNV) series are equipped with a built-in backdraft damper, which prevents entry of air from other apartments into the user's apartment through the ventilation duct.

Compactness

Built-in in-wall fans of the VNV series allow placing fans inside a wall, leaving only the thin front panel visible.

Low noise level

Optimal dimensions allow the VN (VNV) fans to have the best acoustic characteristics – only 27 dBA at the minimum speed.

VENTILATION ORGANIZATION IN AN APARTMENT

Exhaust ventilation of a multi-storey residential building can be arranged as follows.

Mechanical exhaust ventilation systems with natural air intake are designed with exhaust fans in a kitchen, bathroom and toilet.

The window or wall vents provide air intake from outside. Fresh air is supplied to bedrooms, living rooms and other residential rooms.

After air exchange extract air moves through the inner doors to a bathroom, toilet and kitchen, where it is removed by exhaust fans.

No.	Name	Photo	Description
1	**VNV-1 80 KP**		Fan in fireproof casing
2	**PS 102**		Wall vent
3	**PO 400**		Window vent

1
1
2
3
2

VNV-1 80

Ventilation unit for exhaust ventilation

Air capacity:
up to 100 m³/h

APPLICATION

- Exhaust ventilation of high-rise residential and non-residential premises.
- Suitable for premises with mono-pipe ventilation system.
- Mounting in kitchens, bathrooms, toilets, storerooms and other household rooms.
- Installed into the plastic or fireproof casing.
- For periodic or continuous operation.

- The impeller design provides increase of the fan efficiency and the motor service life.

CONTROL

- Speed switching with the external manual switch. For example, P2-1-300 - for a two-speed ventilation unit (switches are supplied separately).

DESIGN

- The front panel is made of high quality and durable ABS plastic.
- Equipped with a polyether filter for motor and impeller protection against dust and dirt penetration (G4 filter class).
- Fastening of the grille during fan mounting provides for adjustment of the front panel rotation angle relative to the casing, which ensures eliminating any inaccuracies during mounting. Front panel can be rotated by 10°.

MOTOR

- Energy-efficient 2-speed motor with minimum energy demand.
- Independent maintenance of pressure and air flow rate in the duct.
- Ball bearings increase the motor service life.
- For precise characteristics, low noise level and safe operation each turbine is dynamically balanced while assembly.

MODIFICATIONS AND OPTIONS

- VNV-1A(E) 80 T – the fan is equipped with a timer.
- VNV-1A(E) 80 TR – the fan is equipped with an adjustable timer.
- VNV-1A(E) 80 I – the fan is equipped with an interval switch.
- VNV-1A(E) 80 H – the fan is equipped with a humidity sensor.

ORDER REF.NO.

VNV-	Front panel	Air flow [m³/h]	80	Add. options*	Front panel colour
	1 – plastic **2** – aluminium	**A** – 35/60 **E** – 75/100		**T** **TR** **I** **H**	_ – white

OPTIONS DESCRIPTION

Name	Description
T timer modification	The fan is switched on to the maximum speed manually with the external switch, turn-on delay time is 50 seconds. The return to default position is performed with the timer, run-out time is 6 minutes. Continuous low speed operation is possible.
TR adjustable timer modification	The fan can be switched to the maximum speed manually with the external switch. Turn-on delay time is set with the internal regulator ranging from 0 to 150 seconds. Run-out time is set with the internal regulator from 2 to 30 minutes. Continuous low speed operation is possible.
I interval switch modification	The fan switches periodically to the maximum speed while operation. The switching interval is set by means of the internal regulator ranging between 0.5 and 15 hours. Run-out time is 10 minutes. The fan can be switched manually with the external switch, turn-on delay time is 50 seconds. Continuous low speed operation is possible.
H humidity sensor modification	The fan switches to the maximum speed as relative humidity level in the room increases. It switches off as relative humidity level drops by 10 % below the set level. The humidity threshold is adjusted in the range between 60 % and 90 %. Force switching to the maximum speed is provided, in this case the turn-on delay time is 50 seconds, and the run-out time is set by the internal regulator between 2 and 30 minutes. Continuous low speed operation is possible.

MOUNTING EXAMPLE

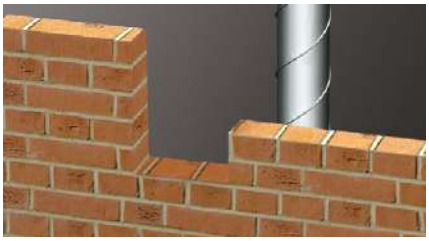

The fan casing is mounted during construction works. Electric wiring for connection of the VNV-1A(E) 80 ventilation unit is led out through a special hole in the casing. The front panel is covered with the protective cardboard plate supplied with the unit to avoid damages or contamination during finishing works in the room. After finishing the works the protective cardboard plate is removed and the VNV-1A(E) 80 ventilation unit is installed into the casing that is connected to the wiring.

AERODYNAMIC CHARACTERISTICS

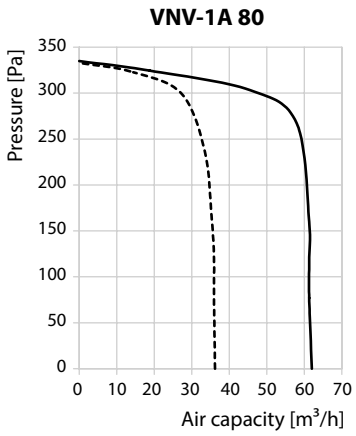

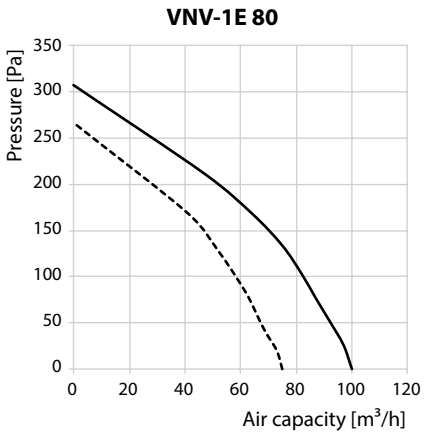

TECHNICAL DATA

	VNV-1A 80		VNV-1E 80	
Number of speeds	1	2	1	2
Frequency [Hz]	50		50	
Voltage [V]	220-240		220-240	
Power consumption [W]	15	25	24	29
Current [A]	0.12	0.14	0.11	0.13
Maximum air flow [m³/h]	35	63	75	100
SFP [W/l/s]	1.54	1.43	1.15	1.04
Sound pressure level at 3 m distance [dBA]	27	36	29	38
Weight [kg]	2.7		2.7	
IP	IP55		IP55	

OVERALL DIMENSIONS

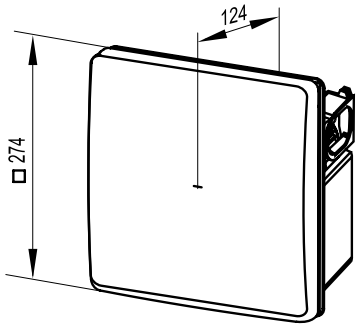

ACCESSORIES

Replaceable filter SF VNV G4	Speed switch	Fireproof casing	Plastic casing

CERTIFICATES

The fans meet safety norms and standards and electromagnetic compatibility directives.

KP 80 / KP2 80

Fireproof casing for ventilation unit

APPLICATION

- Exhaust ventilation of multi-storey residential and public premises with high fire safety requirements.
- Suitable for premises with mono-pipe ventilation system.
- Mounting in kitchens, bathrooms, toilets, storerooms and other household areas.

DESIGN

- Designed to prevent penetration of flame products through ventilation shafts into the premises in case of fire.
- The fire resistance rating is E90/I60 for the KP 80 casing and EI90 for the KP2 80 casing.
- Equipped with a maintenance-free fire-resisting damper and fireproof casing.
- Made of silicate plates manufactured by special cement technology based on calcium silicate.
- The plates contain no asbestos and have high mechanical and insulation properties. High hygroscopic and vapor permeable features provide humidity regulation by the material itself.
- Installed into a wall during construction works.
- Connected with the main ventilation shaft with a flexible air duct.
- Connecting branch pipe diameter – 80 mm.
- Supplied with the protective cardboard plate to protect the casing from dirt and dust penetration during construction and finishing works in the room.

MODIFICATIONS AND OPTIONS

- In case of two-room ventilation system the casing is equipped with extra branch pipes with three air duct layout modifications for adjacent room ventilation. In such a case the kit for exhaust ventilation of the adjacent room is used.
- Installation of an extra branch pipe into the fireproof casing can only be made at the factory and therefore must be specified when ordering.
- If fan in fireproof casing is to be mounted into a ceiling, this must be indicated when ordering the product in order to ensure correct positioning of the fire-resisting damper at the factory.

FIRE-RESISTING DAMPER

- Prevents smoke and fire propagation through the air ducts in case of fire.
- As the temperature in the shaft reaches 90 °C the thermal fuse melts and the damper shuts automatically hot air access off, so the flame and smoke penetration though the ventilation shaft system is prevented.
- The damper plate is made of stainless steel.
- Operates as a backdraft damper when the fan is off and prevents air flow from the ventilation shaft.

ORDER REF.NO.

KP KP2	Extra branch pipe	80
	_ – no extra branch pipe **L** – on the left **P** – on the right **D** – on the bottom	

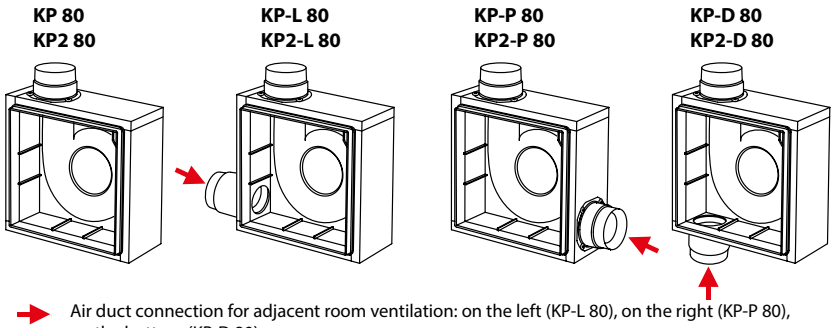

Air duct connection for adjacent room ventilation: on the left (KP-L 80), on the right (KP-P 80), on the bottom (KP-D 80)

OVERALL DIMENSIONS

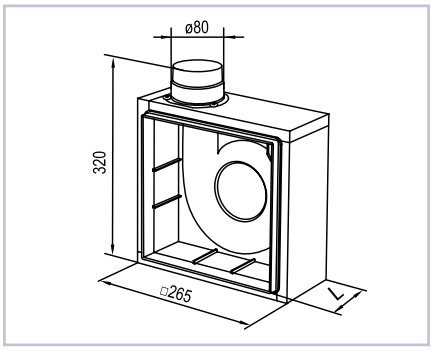

L: – 135 mm for KP casing
– 148 mm for KP2 casing

MOUNTING EXAMPLE

ACCESSORIES

Spirovent	Bracket	Fire-resisting damper	Clamps

KV 80 / KVK 80

Plastic casing for ventilation unit
Plastic casing with fire-resisting damper for ventilation unit

APPLICATION

- Casings for ventilation unit.
- Suitable for premises with mono-pipe ventilation system.
- Mounting in kitchens, bathrooms, toilets, storerooms and other household areas.

KV 80 DESIGN

- Installed into a wall during construction works.
- No fire-proof functions.
- Made of high-quality durable ABS plastic.
- Equipped with the plastic backdraft damper.
- Connected with the main ventilation shaft with a flexible air duct.
- Connecting branch pipe diameter – 80 mm.
- Supplied with the protective cardboard plate to protect the casing from dirt and dust penetration during construction and finishing works in the room.
- The case perforations allow connecting extra branch pipes for adjacent room ventilation. In this case a kit for exhaust ventilation of adjacent room is used. To connect an extra branch pipe remove the plug in the casing.

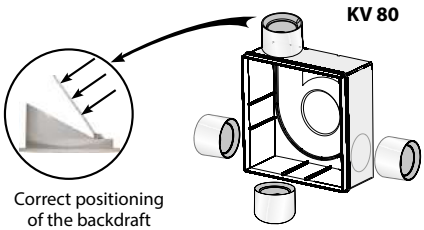

Correct positioning of the backdraft damper

Connection options of a branch pipe for ventilation of the second room

Important!
When mounting the casing, make sure that the backdraft damper is in the correct position, which, in the absence of air flow, must close under its own weight.

KVK 80 DESIGN

- Installed into a wall during constuction works.
- Equipped with maintenance-free fire-resisting damper to prevent fire and smoke penetration along the air ducts.
- As the temperature in the shaft reaches 90 °C the thermal fuse melts and the damper shuts automatically hot air access off, so the flame and smoke penetration though the ventilation shaft system is prevented.
- The fire-resisting damper serves as a backdraft damper when the fan is off and prevents air moving from the ventilation shaft.
- Made of high-quality durable ABS plastic.
- Connected to the main ventilation shaft with a flexible air duct.
- Connecting branch pipe diameter – 80 mm.
- Supplied with the protective cardboard plate to protect the casing from dirt and dust penetration during construction and finishing works in the room.
- In case of adjacent room ventilation system the casing is equipped with extra branch pipes with three air duct layout modifications for adjacent room ventilation. In such a case the kit for exhaust ventilation of adjacent room is used.

ORDER REF.NO.

KV	Fireproof branch pipe	Extra fireproof branch pipe	80
	K	_ – no extra branch pipe **L** – on the left **P** – on the right **D** – on the bottom	

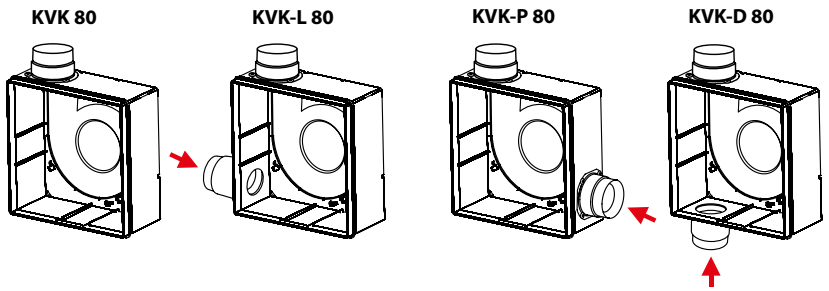

KV 80 OVERALL DIMENSIONS

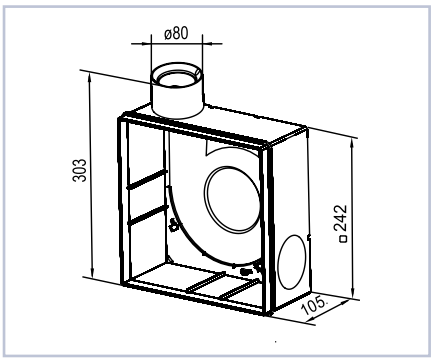

KVK 80 OVERALL DIMENSIONS

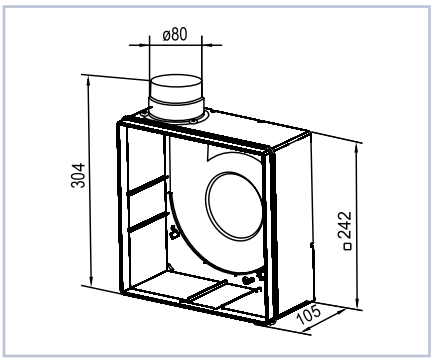

MOUNTING EXAMPLE

ACCESSORIES

Spirovent	Bracket	Clamps

VNV-1A(E) 80 KP
VNV-1A(E) 80 KP2

Centrifugal fan in fireproof casing

Air capacity:
up to 100 m^3/h

APPLICATION

- Exhaust ventilation of high-rise residential and non-residential premises with increased fire prevention requirements.
- Suitable for premises with mono-pipe ventilation system.
- Mounting in kitchens, bathrooms, toilets, storerooms and other household areas.

DESIGN

- Supplied in KP 80 or KP2 80 fireproof casings for flush mounting to wall.
- Equipped with a maintenance-free fire-resisting damper. As the temperature in the shaft reaches 90 °C the thermal fuse melts and the damper shuts automatically hot air access off, so the flame and smoke penetration though the ventilation shaft system is prevented.
- The fire-resisting damper serves as a backdraft damper when the fan is off and prevents air moving from the ventilation shaft.
- The front panel is made of high-quality durable ABS plastic.
- The turnable front panel conceals possible inaccuracies of the fan casing installation.

MOTOR

- Energy-efficient 2-speed motor on ball bearings with minimum energy demand.
- Independent maintenance of pressure and air flow rate in the duct.
- For precise characteristics, low noise level and safe operation each turbine is dynamically balanced while assembly.

CONTROL

- Speed switch is performed with the external manual speed switch. For example, P2-1-300 (switches are supplied separately).

MODIFICATIONS AND OPTIONS

- **VNV-1A(E) 80 KP T** – the fan is equipped with a timer.
- **VNV-1A(E) 80 KP TR** – the fan is equipped with an adjustable timer.
- **VNV-1A(E) 80 KP I** – the fan is equipped with an interval switch.
- **VNV-1A(E) 80 KP H** – the fan is equipped with a humidity sensor.
- In case of second room ventilation system the casing is equipped with extra branch pipes with three air duct layout modifications for adjacent room ventilation.
- In such a case the kit for exhaust ventilation of the adjacent room is used.
- **VNV-1A(E) 80 KP-P** – the fan is equipped with a front panel from mirror finish aluminium
- **VNV-1A(E) 80 KP-L** – the fan is equipped with a extra branch pipe on the left.
- **VNV-1A(E) 80 KP-D** – the fan is equipped with a extra branch pipe on the bottom.

ORDER REF.NO.

VNV-	Front panel	Air flow [m^3/h]	80 KP	Extra branch pipe	Additional options	Front panel colour
	1 – plastic	**A** – 35/60 **E** – 75/100		_ – no extra branch pipe **L** – on the left **P** – on the right **D** – on the bottom	**T** **TR** **I** **H**	_ – white

OPTIONS DESCRIPTION

Name	Description
T timer modification	The fan is switched on to the maximum speed manually with the external switch, turn-on delay time is 50 seconds. The return to default position is performed with the timer, run-out time is 6 minutes. Continuous low speed operation is possible.
TR adjustable timer modification	The fan can be switched to the maximum speed manually with the external switch. Turn-on delay time is set with the internal regulator ranging from 0 to 150 seconds. Run-out time is set with the internal regulator from 2 to 30 minutes. Continuous low speed operation is possible.
I interval switch modification	The fan switches periodically to the maximum speed while operation. The switching interval is set by means of the internal regulator ranging between 0.5 and 15 hours. Run-out time is 10 minutes. The fan can be switched manually with the external switch, turn-on delay time is 50 seconds. Continuous low speed operation is possible.
H humidity sensor modification	The fan switches to the maximum speed as relative humidity level in the room increases. It switches off as relative humidity level drops by 10 % below the set level. The humidity threshold is adjusted in the range between 60 % and 90 %. Force switching to the maximum speed is provided, in this case the turn-on delay time is 50 seconds, and the run-out time is set by the internal regulator between 2 and 30 minutes. Continuous low speed operation is possible.

MOUNTING EXAMPLE

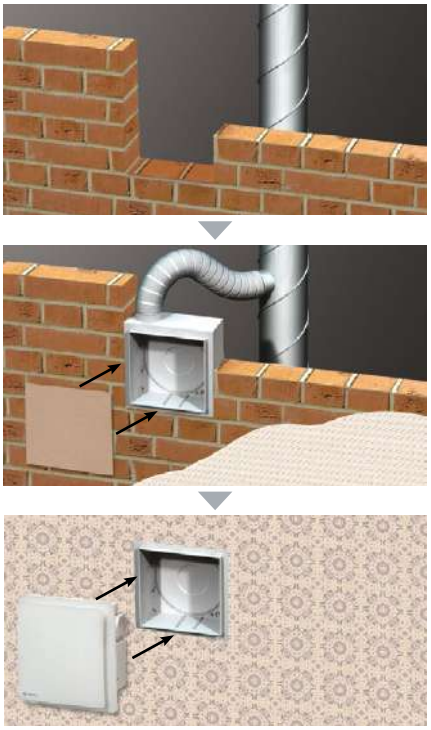

The fan casing is mounted during construction works. Electric wiring for connection of the VNV-1A(E) 80 ventilation unit is led out through a special hole in the casing. The front panel is covered with the protective cardboard plate supplied with the unit to avoid damages or contamination during finishing works in the room. After finishing the works the protective cardboard plate is removed and the VNV-1A(E) 80 ventilation unit is installed into the casing that is connected to the wiring.

AERODYNAMIC CHARACTERISTICS

VNV-1A 80 KP
VNV-1A 80 KP2

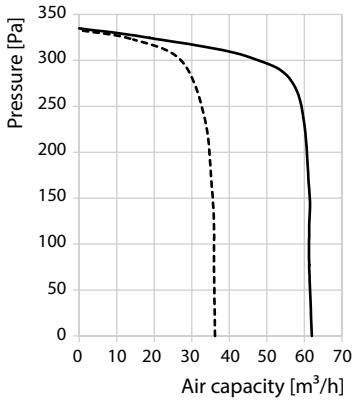

VNV-1E 80 KP
VNV-1E 80 KP2

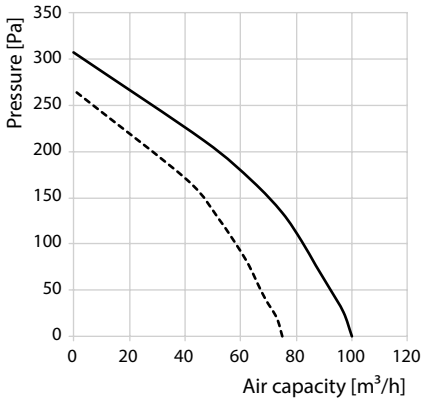

TECHNICAL DATA

	VNV-1A 80 KP VNV-1A 80 KP2		VNV-1E 80 KP VNV-1E 80 KP2	
Number of speeds	1	2	1	2
Frequency [Hz]	50		50	
Voltage [V]	220-240		220-240	
Power consumption [W]	15	25	24	29
Current [A]	0.12	0.14	0.11	0.13
Maximum air flow [m³/h]	35	63	75	100
SFP [W/l/s]	1.54	1.43	1.15	1.04
Sound pressure level at 3 m distance [dBA]	27	36	29	38
Weight [kg]	2.7		2.7	
IP	IP55		IP55	

OVERALL DIMENSIONS

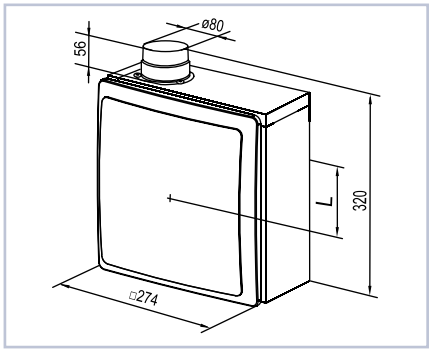

L: – 163 mm for VNV-1... 80 KP
– 176 mm for VNV-1... 80 KP2

ACCESSORIES

Filter	Speed switch	Bracket	Thermovent	Clamps

CERTIFICATES

The fans meet safety norms and standards and electromagnetic compatibility directives.

VNV-1A(E) 80 KV
VNV-1A(E) 80 KVK

Centrifugal fan in plastic casing

Air capacity:
up to 100 m³/h

APPLICATION

- Suitable for premises with mono-pipe ventilation system.
- Mounting in kitchens, bathrooms, toilets, storerooms and other household areas.
- Connected with the main ventilation shaft with a flexible air duct.
- Connecting branch pipe diameter – 80 mm.

DESIGN

- Supplied in plastic casing for flush mounting to wall.
- The front panel is made of high-quality durable ABS plastic.
- The fan KVK-1A(E) 80 KV is equipped with a plastic backdraft damper.
- KVK-1A(E) 80 KVK fan is equipped with a maintenance-free fire-resisting damper (when air temperature in the shaft rises to 90 °C, a fusible insert is triggered, and the valve automatically closes the access of hot air, thereby preventing spread of fire and smoke).
- When KVK-1A(E) 80 KVK fan is off, the fire-resisting damper serves as a backdraft damper preventing air flow from the ventilation shaft.
- Rotating front cover allows eliminating inaccuracies during mounting of the fan casing.

MOTOR

- Energy-efficient 2-speed motor on ball bearings with minimum energy demand.
- Independent maintenance of pressure and air flow rate in the duct.
- Fastened to the casing by means of latches with no tools.
- For precise characteristics, low noise level and safe operation each turbine is dynamically balanced while assembly.

CONTROL

- Speed switch by means of the external manual switch. For example, P2-1-300 (switches are supplied separately).

MODIFICATIONS AND OPTIONS

- **VNV-1 80 KV T** – the fan is equipped with a timer.
- **VNV-1 80 KV TR** – the fan is equipped with an adjustable timer.
- VNV-1 80 KV I – the fan is equipped with an interval switch.
- **VNV-1 80 KV N** – the fan is equipped with a humidity sensor and a plastic gravitational backdraft damper.
- **VNV-1A(E) 80 KVK T** – the fan is equipped with a timer and a fire-resisting damper.
- **VNV-1A(E) 80 KVK TR** – the fan is equipped with an adjustable timer and a fire-resisting damper.
- **VNV-1A(E) 80 KVK I** – the fan is equipped with an interval switch and a fire-resisting damper.
- **VNV-1A(E) 80 KVK N** – the fan is equipped with a humidity sensor and a fire-resisting damper.
- The case perforations allow connecting extra branch pipes for second room ventilation system. In case of second room ventilation system the casing is perforated for extra branch pipes for exhaust ventilation of the adjacent room. Remove a plug in the casing to connect extra branch pipe.

ORDER REF.NO.

VNV-	Front panel	Air flow [m³/h]	KV	Fireproof branch pipe	Additional options	Front panel colour
	1 – plastic	**A** – 35/60 **E** – 75/100		**K**	**T** **TR** **I** **H**	_ – white

OPTIONS DESCRIPTION

Name	Description
T timer modification	The fan is switched on to the maximum speed manually with the external switch, turn-on delay time is 50 seconds. The return to default position is performed with the timer, run-out time is 6 minutes. Continuous low speed operation is possible.
TR adjustable timer modification	The fan can be switched to the maximum speed manually with the external switch. Turn-on delay time is set with the internal regulator ranging from 0 to 150 seconds. Run-out time is set with the internal regulator from 2 to 30 minutes. Continuous low speed operation is possible.
I interval switch modification	The fan switches periodically to the maximum speed while operation. The switching interval is set by means of the internal regulator ranging between 0.5 and 15 hours. Run-out time is 10 minutes. The fan can be switched manually with the external switch, turn-on delay time is 50 seconds. Continuous low speed operation is possible.
H humidity sensor modification	The fan switches to the maximum speed as relative humidity level in the room increases. It switches off as relative humidity level drops by 10 % below the set level. The humidity threshold is adjusted in the range between 60 % and 90 %. Force switching to the maximum speed is provided, in this case the turn-on delay time is 50 seconds, and the run-out time is set by the internal regulator between 2 and 30 minutes. Continuous low speed operation is possible.

MOUNTING EXAMPLE

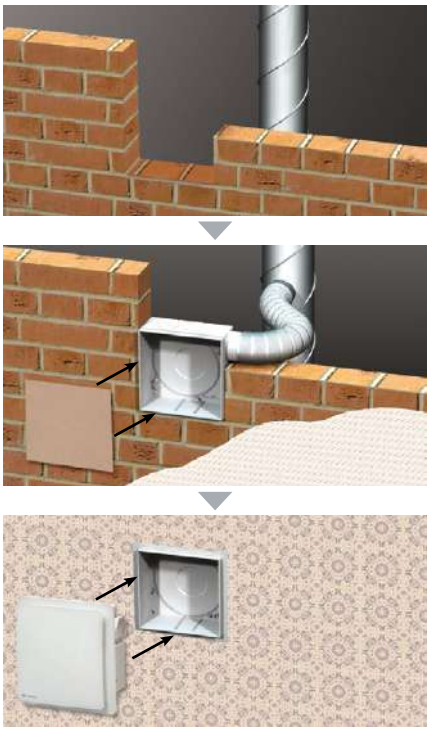

The fan casing is mounted during construction works. Electric wiring for connection of the VNV-1A(E) 80 ventilation unit is routed through a special hole in the casing. The front panel is covered with the protective cardboard plate supplied with the unit to avoid damages or contamination during finishing works in the room. After finishing the repair works the protective cardboard plate is removed and the VNV-1A(E) 80 ventilation unit is installed into the casing and connected to the wiring.

AERODYNAMIC CHARACTERISTICS

VNV-1A 80 KV
VNV-1A 80 KVK

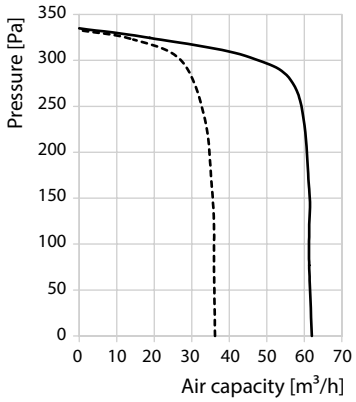

VNV-1E 80 KP
VNV-1E 80 KP2

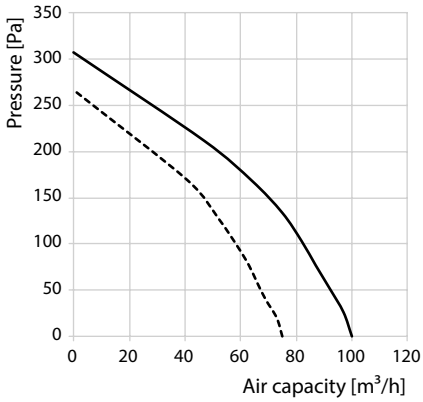

TECHNICAL DATA

	VNV-1A 80 KV VNV-1A 80 KVK		VNV-1E 80 KV VNV-1E 80 KVK	
Number of speeds	1	2	1	2
Frequency [Hz]	50		50	
Voltage [V]	220-240		220-240	
Power consumption [W]	15	25	24	29
Current [A]	0.12	0.14	0.11	0.13
Maximum air flow [m³/h]	35	63	75	100
SFP [W/l/s]	1.54	1.43	1.15	1.04
Sound pressure level at 3 m distance [dBA]	27	36	29	38
Weight [kg]	2.7		2.7	
IP	IP55		IP55	

OVERALL DIMENSIONS

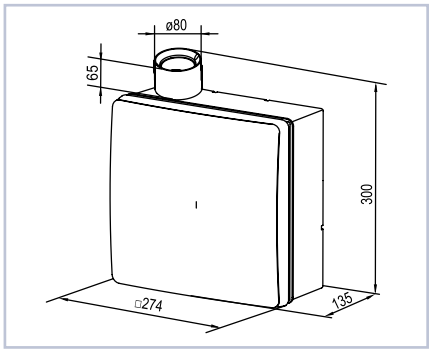

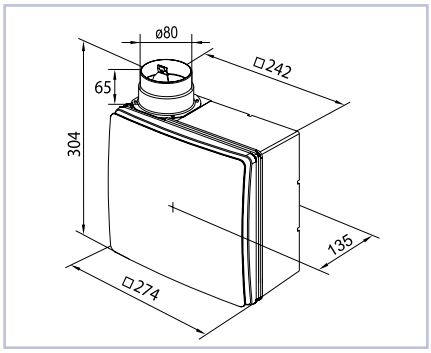

ACCESSORIES

Filter	Speed switch	Bracket	Aluvent	Clamps

CERTIFICATES

The fans meet safety norms and standards and electromagnetic compatibility directives.

VNV-1A(E) 80 KV2

Centrifugal fan
in plastic casing with
backward air discharge

Air capacity:
up to 100 m^3/h

APPLICATION

- Exhaust ventilation of high-rise residential and non-residential premises with increased fire prevention requirements.
- Suitable for premises with mono-pipe ventilation system.
- Mounting in kitchens, bathrooms, toilets, storerooms and other household areas.

DESIGN

- Supplied in a KV2 80 plastic casing for flush-mounting into a wall with backward air discharge.
- The front panel is made of high-quality durable ABS plastic.
- Equipped with a plastic gravitational backdraft damper.
- The turnable front panel conceals possible inaccuracies of the fan casing installation.
- Rotating front cover allows eliminating inaccuracies during mounting of the fan casing.
- Connected with the main ventilation shaft with a flexible air duct.
- Connecting branch pipe diameter – 80 mm.

MOTOR

- Energy-efficient 2-speed motor on ball bearings with minimum energy demand.
- Independent maintenance of pressure and air flow rate in the duct.
- Fastened to the casing by means of latches with no tools.
- For precise characteristics, low noise level and safe operation each turbine is dynamically balanced while assembly.

CONTROL

- Speed switch is performed with the external manual switch. For example, P2-1-300 (switches are supplied separately).

MODIFICATIONS AND OPTIONS

- **VNV-1A(E) 80 KV2 T** – the fan is equipped with a timer.
- **VNV-1A(E) 80 KV2 TR** – the fan is equipped with an adjustable timer.
- **VNV-1A(E) 80 KV2 I** – the fan is equipped with an interval switch.
- **VNV-1A(E) 80 KV2 H** – the fan is equipped with a humidity sensor. In case of second room ventilation system the casing is equipped with extra branch pipes with three air duct layout modifications for adjacent room ventilation. In such a case the kit for exhaust ventilation of the adjacent room is used.

ORDER REF.NO.

VNV-	Front panel	Air flow [m^3/h]	80 KV2	Additional options	Front panel colour
	1 – plastic	**A** – 35/60 **E** – 75/100		**T** **TR** **I** **H**	_ – white

OPTIONS DESCRIPTION

Name	Description
T timer modification	The fan is switched on to the maximum speed manually with the external switch, turn-on delay time is 50 seconds. The return to default position is performed with the timer, run-out time is 6 minutes. Continuous low speed operation is possible.
TR adjustable timer modification	The fan can be switched to the maximum speed manually with the external switch. Turn-on delay time is set with the internal regulator ranging from 0 to 150 seconds. Run-out time is set with the internal regulator from 2 to 30 minutes. Continuous low speed operation is possible.
I interval switch modification	The fan switches periodically to the maximum speed while operation. The switching interval is set by means of the internal regulator ranging between 0.5 and 15 hours. Run-out time is 10 minutes. The fan can be switched manually with the external switch, turn-on delay time is 50 seconds. Continuous low speed operation is possible.
H humidity sensor modification	The fan switches to the maximum speed as relative humidity level in the room increases. It switches off as relative humidity level drops by 10 % below the set level. The humidity threshold is adjusted in the range between 60 % and 90 %. Force switching to the maximum speed is provided, in this case the turn-on delay time is 50 seconds, and the run-out time is set by the internal regulator between 2 and 30 minutes. Continuous low speed operation is possible.

MOUNTING EXAMPLE

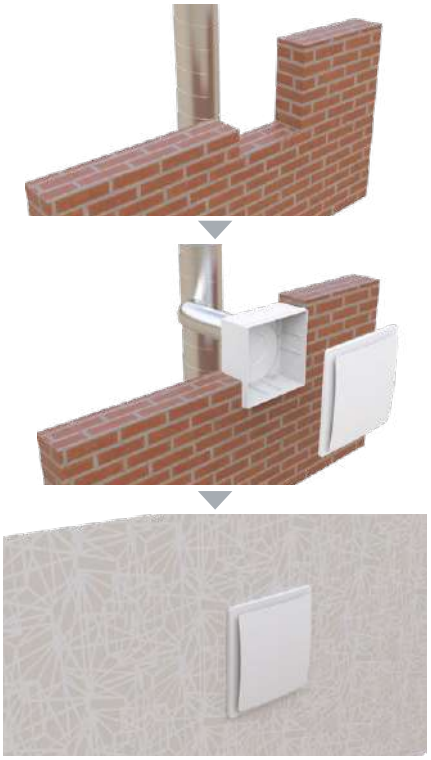

The fan casing is mounted during construction works. Electric wiring for connection of the VNV-1A(E) 80 ventilation unit is led out through a special hole in the casing. The front panel is covered with the protective cardboard plate supplied with the unit to avoid damages or contamination during finishing works in the room. After finishing the works the protective cardboard plate is removed and the VNV-1A(E) 80 ventilation unit is installed into the casing that is connected to the wiring.

AERODYNAMIC CHARACTERISTICS

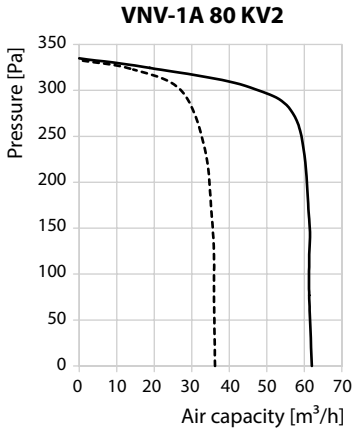

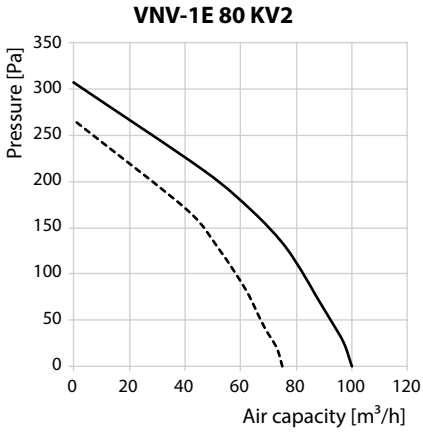

TECHNICAL DATA

	VNV-1A 80 KV2		VNV-1E 80 KV2	
Number of speeds	1	2	1	2
Frequency [Hz]	50		50	
Voltage [V]	220-240		220-240	
Power consumption [W]	15	25	24	29
Current [A]	0.12	0.14	0.11	0.13
Maximum air flow [m³/h]	35	63	75	100
SFP [W/l/s]	1.54	1.43	1.15	1.04
Sound pressure level at 3 m distance [dBA]	27	36	29	38
Weight [kg]	2.7		2.7	
IP	IP55		IP55	

OVERALL DIMENSIONS

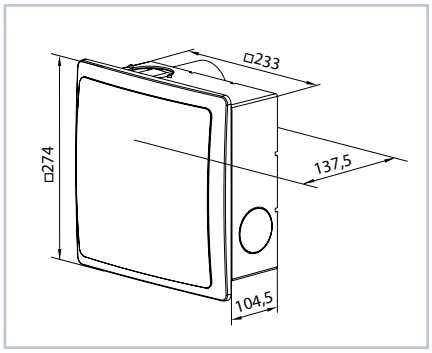

ACCESSORIES

Filter	Speed switch	Bracket	Thermovent	Clamps

CERTIFICATES

The fans meet safety norms and standards and electromagnetic compatibility directives.

VN-1A(E) 80, VN-A(E) 80

Centrifugal fans
in plastic casing

Air capacity:
up to 100 m³/h

APPLICATION

- Suitable for premises with mono-pipe ventilation system.
- Mounting in kitchens, bathrooms, toilets, storerooms and other household areas.

DESIGN

- For wall surface mounting.
- The front panel and the casing are made of high-quality durable ABS plastic.
- Equipped with the plastic backdraft damper.
- Connected with the main ventilation shaft with a flexible air duct.
- Connecting branch pipe diameter – 80 mm.

MOTOR

- Energy-efficient 2-speed motor on ball bearings with minimum energy demand.
- Independent maintenance of pressure and air flow rate in the duct.
- For precise characteristics, low noise level and safe operation each turbine is dynamically balanced while assembly.

CONTROL

- Speed switch is performed with the external manual switch. For example, P2-1-300 (switches are supplied separately).

MODIFICATIONS AND OPTIONS

- **VN-1A(E) 80 T / VN-A(E) 80 T** – the fans are equipped with a timer.
- **VN-1A(E) 80 TR / VN-A(E) 80 TR** – the fans are equipped with an adjustable timer.
- **VN-1A(E) 80 I / VN-A(E) 80 I** – the fans are equipped with an interval switch.
- **VN-1A(E) 80 H / VN-A(E) 80 H** – the fans are equipped with a humidity sensor.

ORDER REF.NO.

VN-	Front panel	Air flow [m³/h]	80	Additional options	Front panel colour
	_ – grille **1** – flat plastic front cover	**A** – 35/60 **E** – 75/100		**T** **TR** **I** **H**	_ – white

OPTIONS DESCRIPTION

Name	Description
T timer modification	The fan is switched on to the maximum speed manually with the external switch, turn-on delay time is 50 seconds. The return to default position is performed with the timer, run-out time is 6 minutes. Continuous low speed operation is possible.
TR adjustable timer modification	The fan can be switched to the maximum speed manually with the external switch. Turn-on delay time is set with the internal regulator ranging from 0 to 150 seconds. Run-out time is set with the internal regulator from 2 to 30 minutes. Continuous low speed operation is possible.
I interval switch modification	The fan switches periodically to the maximum speed while operation. The switching interval is set by means of the internal regulator ranging between 0.5 and 15 hours. Run-out time is 10 minutes. The fan can be switched manually with the external switch, turn-on delay time is 50 seconds. Continuous low speed operation is possible.
H humidity sensor modification	The fan switches to the maximum speed as relative humidity level in the room increases. It switches off as relative humidity level drops by 10 % below the set level. The humidity threshold is adjusted in the range between 60 % and 90 %. Force switching to the maximum speed is provided, in this case the turn-on delay time is 50 seconds, and the run-out time is set by the internal regulator between 2 and 30 minutes. Continuous low speed operation is possible.

MOUNTING EXAMPLE

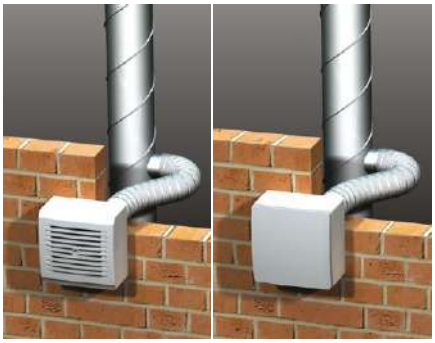

AERODYNAMIC CHARACTERISTICS

VN-1A 80
VN-A 80

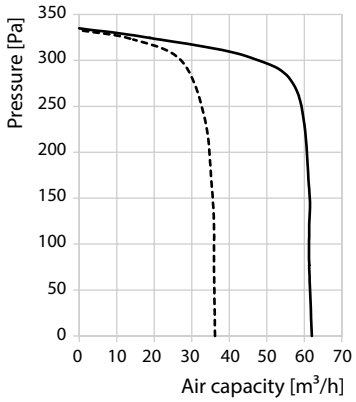

VN-1E 80
VN-E 80

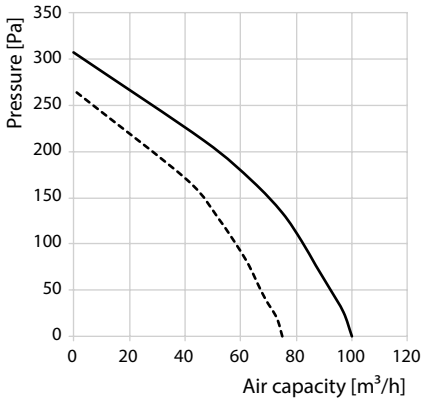

TECHNICAL DATA

	VN-1A 80 VN-A 80		VN-1E 80 VN-E 80	
Number of speeds	1	2	1	2
Frequency [Hz]	50		50	
Voltage [V]	220-240		220-240	
Power consumption [W]	15	25	24	29
Current [A]	0.12	0.14	0.11	0.13
Maximum air flow [m³/h]	35	63	75	100
SFP [W/l/s]	1.54	1.43	1.15	1.04
Sound pressure level at 3 m distance [dBA]	27	36	29	38
Weight [kg]	2.7		2.7	
IP	IP55		IP55	

OVERALL DIMENSIONS

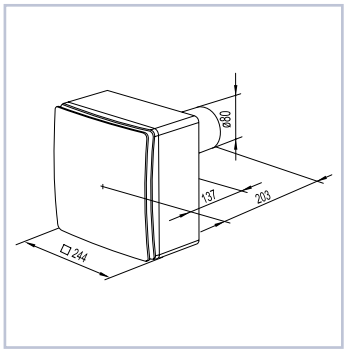

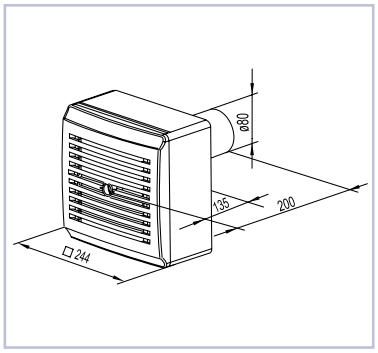

ACCESSORIES

Filter	Speed switch	Door grille	Thermovent	Clamps

CERTIFICATES

The fans meet safety norms and standards and electromagnetic compatibility directives.

VN-1A(E) 80 K, VN-A(E) 80 K

Centrifugal fans
in plastic casing
with fire-resisting damper

Air capacity:
up to 100 m³/h

APPLICATION

- Exhaust ventilation of high-rise residential and non-residential premises with increased fire prevention requirements.
- Suitable for premises with mono-pipe ventilation system.
- Mounting in kitchens, bathrooms, toilets, storerooms and other household areas.

DESIGN

- For wall surface mounting.
- The front panel and the casing are made of high-quality durable ABS plastic.
- Equipped with maintenance-free fire-resisting damper. As the temperature in the shaft reaches 90 °C the thermal fuse melts and the damper shuts automatically hot air access off, and the flame and smoke ingress to the room though the ventilation shaft system is prevented.
- For easy mounting the damper is mounted on a pivot rod.
- First mount the damper to the wall and then fix the fan casing (see mounting examples).
- The fire-resisting damper serves as a backdraft damper when the fan is off and prevents air moving from the ventilation shaft.
- Connected with the main ventilation shaft with a flexible air duct.
- Connecting branch pipe diameter – 80 mm.

MOTOR

- Energy-efficient 2-speed motor on ball bearings with minimum energy demand.
- Independent maintenance of pressure and air flow rate in the duct.
- For precise characteristics, low noise level and safe operation each turbine is dynamically balanced while assembly.

CONTROL

- Speed switch is performed with the external manual switch. For example, P2-1-300 (switches are supplied separately).

MODIFICATIONS AND OPTIONS

- **VN-1A(E) 80 K T / VN 80-A(E) K T** – the fans are equipped with a timer.
- **VN-1A(E) 80 K TR / VN 80-A(E) K TR** – the fans are equipped with an adjustable timer.
- **VN-1A(E) 80 K I / VN 80-A(E) K I** – the fans are equipped with an interval switch.
- **VN-1A(E) 80 K H / VN 80-A(E) K H** – the fans are equipped with a humidity sensor.

ORDER REF.NO.

VNV-	Front panel	Air flow [m³/h]	80 K	Additional options	Front panel colour
	_ – grille **1** – plastic cover	**A** – 35/60 **E** – 75/100		**T** **TR** **I** **H**	_ – white

OPTIONS DESCRIPTION

Name	Description
T timer modification	The fan is switched on to the maximum speed manually with the external switch, turn-on delay time is 50 seconds. The return to default position is performed with the timer, run-out time is 6 minutes. Continuous low speed operation is possible.
TR adjustable timer modification	The fan can be switched to the maximum speed manually with the external switch. Turn-on delay time is set with the internal regulator ranging from 0 to 150 seconds. Run-out time is set with the internal regulator from 2 to 30 minutes. Continuous low speed operation is possible.
I interval switch modification	The fan switches periodically to the maximum speed while operation. The switching interval is set by means of the internal regulator ranging between 0.5 and 15 hours. Run-out time is 10 minutes. The fan can be switched manually with the external switch, turn-on delay time is 50 seconds. Continuous low speed operation is possible.
H humidity sensor modification	The fan switches to the maximum speed as relative humidity level in the room increases. It switches off as relative humidity level drops by 10 % below the set level. The humidity threshold is adjusted in the range between 60 % and 90 %. Force switching to the maximum speed is provided, in this case the turn-on delay time is 50 seconds, and the run-out time is set by the internal regulator between 2 and 30 minutes. Continuous low speed operation is possible.

MOUNTING EXAMPLE

AERODYNAMIC CHARACTERISTICS

VN-1A 80 K
VN-A 80 K

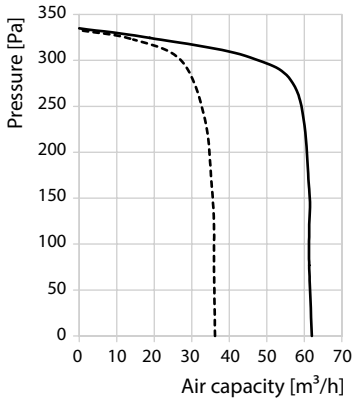

VN-1E 80 K
VN-E 80 K

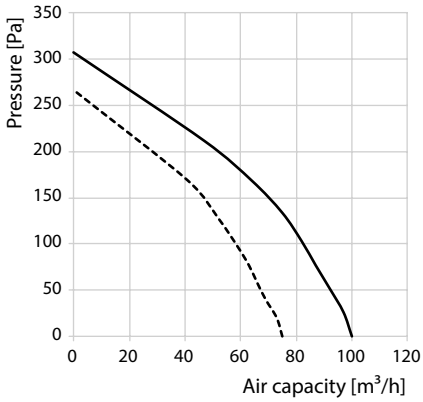

TECHNICAL DATA

	VN-1A 80 K VN-A 80 K		VN-1E 80 K VN-E 80 K	
Number of speeds	1	2	1	2
Frequency [Hz]	50		50	
Voltage [V]	220-240		220-240	
Power consumption [W]	15	25	24	29
Current [A]	0.12	0.14	0.11	0.13
Maximum air flow [m³/h]	35	63	75	100
SFP [W/l/s]	1.54	1.43	1.15	1.04
Sound pressure level at 3 m distance [dBA]	27	36	29	38
Weight [kg]	2.7		2.7	
IP	IP55		IP55	

OVERALL DIMENSIONS

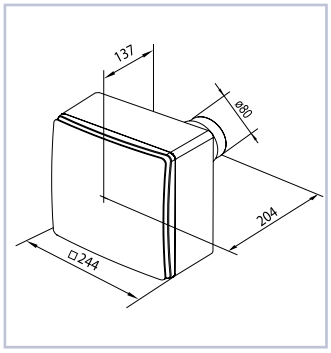

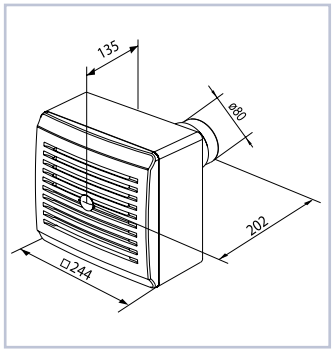

ACCESSORIES

Filter	Speed switch	Thermovent	Clamps

CERTIFICATES

The fans meet safety norms and standards and electromagnetic compatibility directives.

PL-10

Fire-resisting damper

APPLICATION

- Fire-resisting damper prevents smoke and fire propagation through the air ducts of ventilation and air conditioning systems in case of fire.
- Mounted in the ventilation ducts laid through fireproof walls and ceilings.
- The fire resistance rating according to EN 1366-2 is EI 120.

DESIGN

- Consists of a galvanized steel casing (1), blades from insulation material (calcium silicate) and fireproof material (2), thermic release mechanism (3) activated at 72 °C, silicone seal (4) and spring (5).
- The Fire-resisting damper is open while operation.
- In case of fire the thermoelement melts at 72 °C and the spring moves the blade to closed position.

MOUNTING

- Install the fire-resisting damper in such a way so that the release mechanism and inspection hole are on the side of the wall or ceiling for easy inspection of the thermic release mechanism and its internal part.
- Building the damper into brick and concrete walls or gypsum plates with the relevant fire resistance rating is allowed.
- To preserve the casing shape during the mounting works use wooden supports to prevent possible casing deformation and remove them after the final mounting.

Warning!

It is not allowed to install the damper:

- in air ducts of rooms of A and B categories of explosion and fire hazard;
- in air ducts of local removers of fire and explosion hazard mixtures;
- in systems that cannot be cleaned periodically in accordance with the established regulations for prevention of formation of combustible deposits.

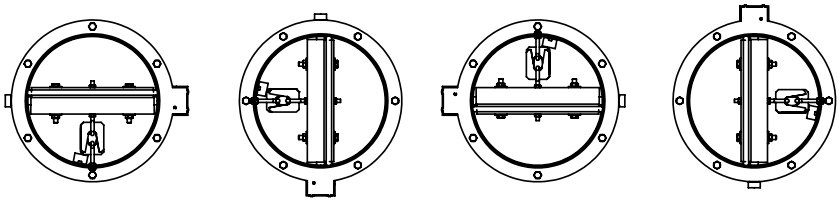

0° 90° 180° 270°

Recommended positions of fire-resisting damper

ORDER REF.NO.

Device designation	Damper nominal diameter [mm]	Fire resistance rating
PL-10 – fire-resisting damper	100; 125; 150; 160; 180; 200; 225; 250; 315; 355; 400	EI 120 – 2 hours

OVERALL DIMENSIONS

Fire-resisting damper with a mechanical actuating unit with a thermal fuse and a return spring

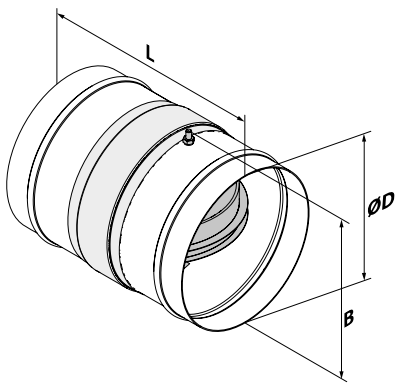

Overall and connecting dimensions of PL dampers with a mechanical drive device

Modification	Dimensions [mm]			Weight [kg]
	ØD	L	B	
PL-10-1A-DN100/EI 120	99	170	112	1
PL-10-1A-DN125/EI 120	124	170	137	1.2
PL-10-1A-DN150/EI 120	149	170	162	1.5
PL-10-1A-DN160/EI 120	159	170	172	1.6
PL-10-1A-DN180/EI 120	179	170	192	1.8
PL-10-1A-DN200/EI 120	199	170	212	2
PL-10-1A-DN225/EI 120	224	170	237	2.2
PL-10-1A-DN250/EI 120	249	190	262	2.5
PL-10-1A-DN315/EI 120	314	190	327	3.6
PL-10-1A-DN355/EI 120	354	190	367	4.4
PL-10-1A-DN400/EI 120	399	240	412	6

The charts below show the ventilation shaft size as a function of number of storeys in the multi-storey buildings with mono-pipe ventilation system.

60 m³/h

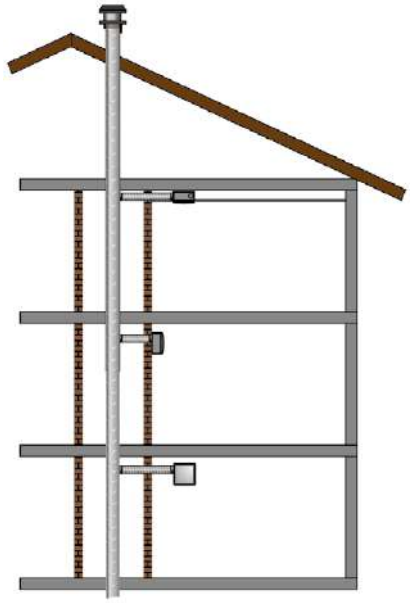

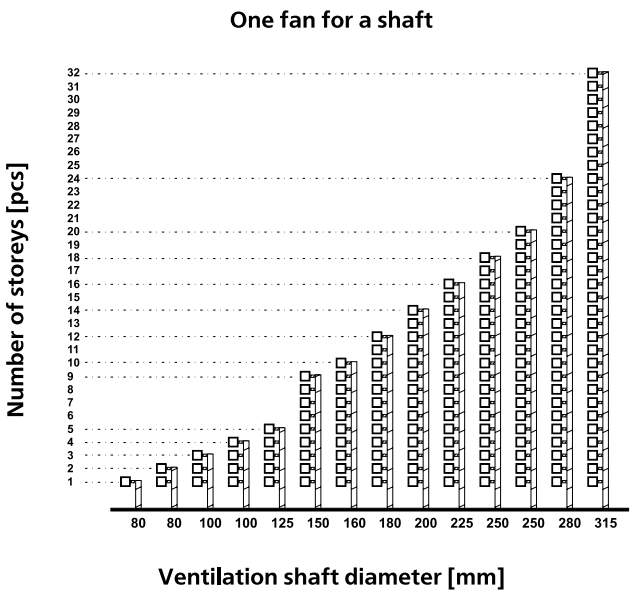

60 m³/h

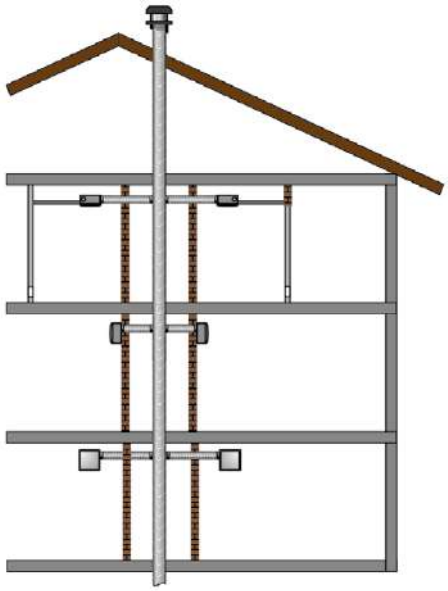

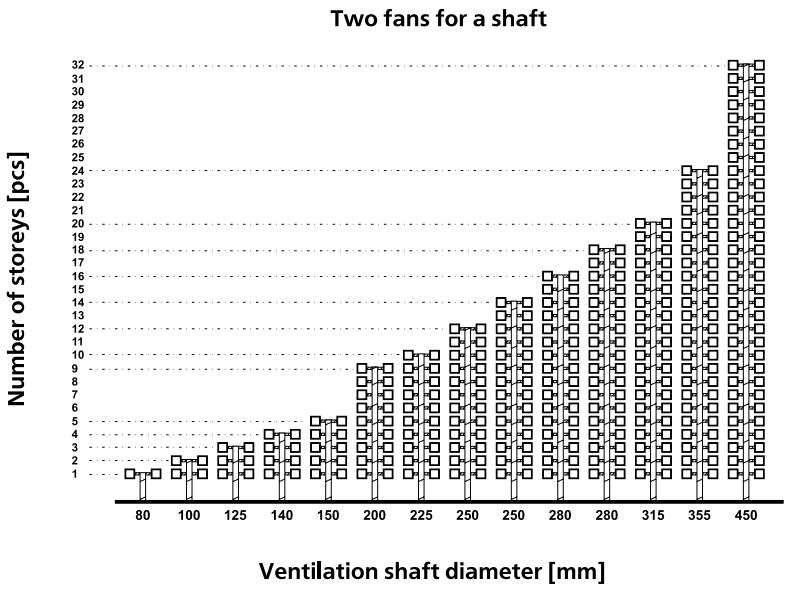

100 m³/h

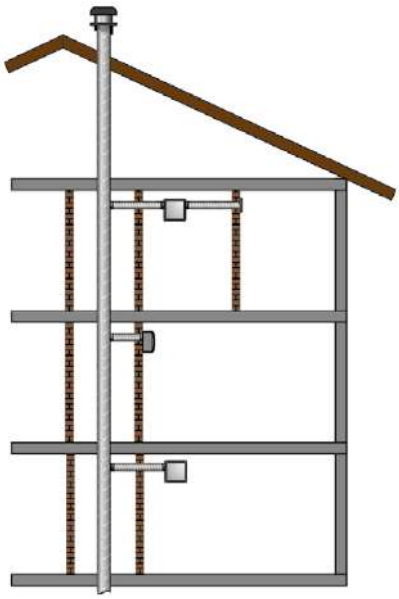

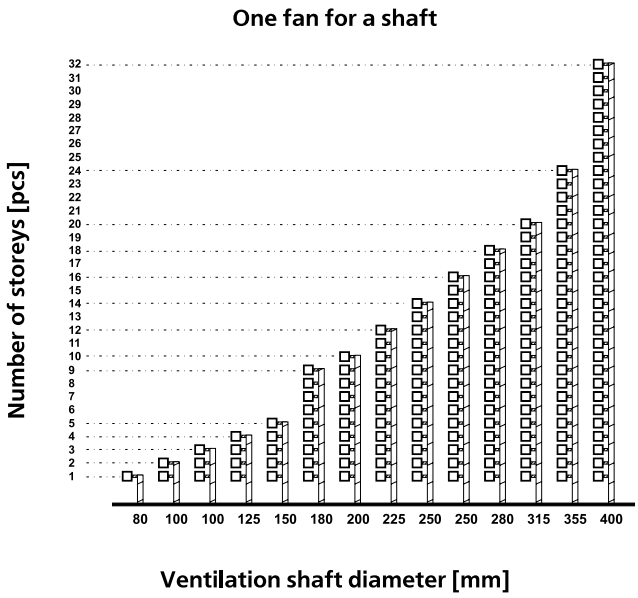

100 m³/h

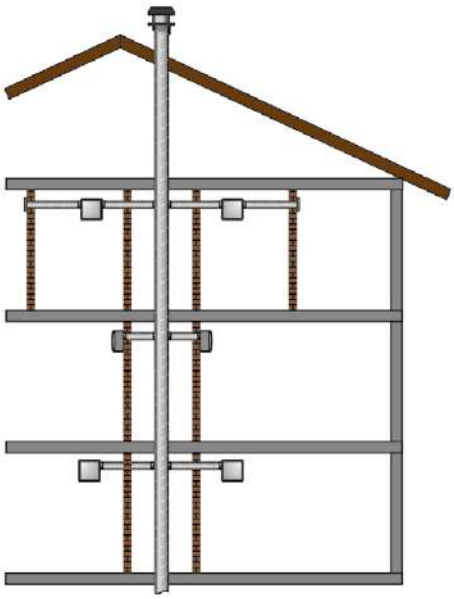

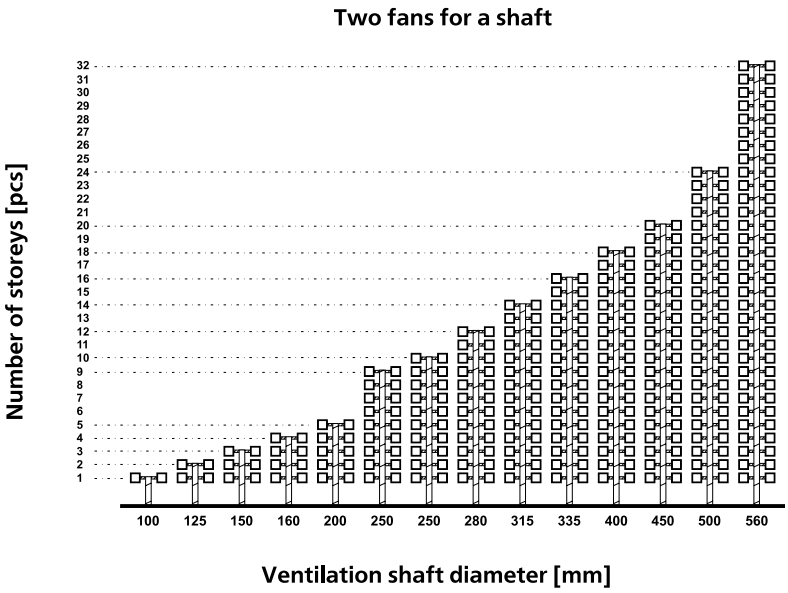

Connection of basic two-speed fan models

Wiring diagram 1

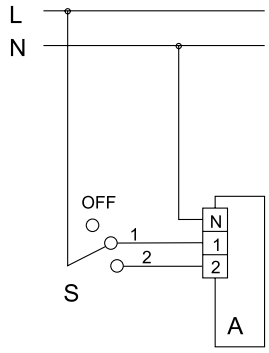

The fan can be switched on to one of two speeds manually with the external speed switch S (e.g. P2-1-300) or switched off.

Wiring diagram 2

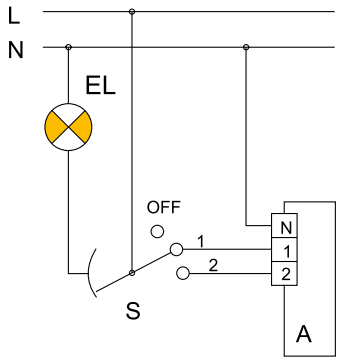

The fan can be switched on to one of two speeds manually with the external speed switch S (e.g. P2-1-300) with parallel turning on the light in the room or switched off with parallel turning off the light in the room. The fan cannot be switched on without turning on the light and vice versa.

VNV-1(A, E) 80
VNV-1(A, E) 80 KP
VNV-1(A, E) 80 KV
VN-1(A, E) 80
VN-(A, E) 80
VNV-1(A, E) 80 KP2
VNV-1(A, E) 80 KV2
VNV-1(A, E) 80 KVK
VN-1(A, E) 80 K
VN (A, E) 80 K

Wiring diagram 3

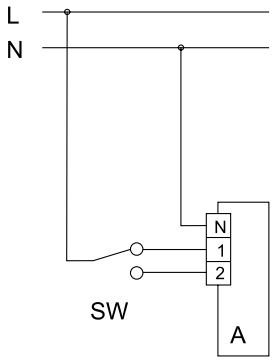

The fan runs permanently at the first speed or second speed. The speed is selected with SW switch.

Connection of basic two-speed fan models with timer (T), adjustable timer (TR) or interval switch (I)

Wiring diagram 4

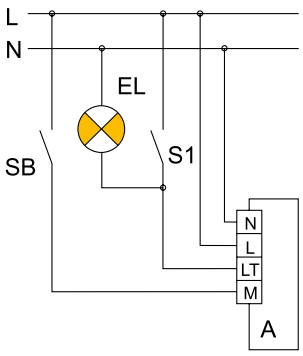

Timer (T) or regulated timer (TR) modification:

The fan with T and TR modification runs permanently at the first speed with the closed SB switch or is switched off as the switch is open. The fan can be switched on to the second speed manually with S1 switch with parallel turning on the light in the room. Turn-on delay time for the second speed then makes 50 seconds for T modification and from 0 to 150 seconds for TR modification. After switching off S1switch the light in the room is turned off, but the fan keeps running for the time period set by the timer, i.e. 6 minutes for T modification and from 2 up to 30 minutes for TR modification, then it switches automatically to the first speed or switches off.

VNV-1(A, E) 80 (T, TR, I)
VNV-1(A, E) 80 KP (T, TR, I)
VNV-1(A, E) 80 KV (T, TR, I)
VN-1(A, E) 80 (T, TR, I)
VN-(A, E) 80 (T, TR, I)
VNV-1(A, E) 80 KP2 (T, TR, I)
VNV-1(A, E) 80 KV2 (T, TR, I)
VNV-1(A, E) 80 KVK (T, TR, I)
VN-1(A, E) 80 K (T, TR, I)
VN-(A, E) 80 K (T, TR, I)

Interval switch modification (I):

The fan with the interval switch (I) permanently runs at the first speed with the closed SB switch or is switched off as the switch is open. The fan periodically switches to the second speed within the switching interval from 0.5 to 15 hours set manually and continues operating with the second speed within 10 minutes. The fan can be switched on to the second speed manually with S1 switch with parallel turning on the light in the room. Turn-on delay time for the second speed then makes 50 seconds. After switching off S1 switch the light in the room is turned off and the fan resets to the interval operation mode.

Connection of two-speed fan models with humidity sensor (H)

Wiring diagram 5

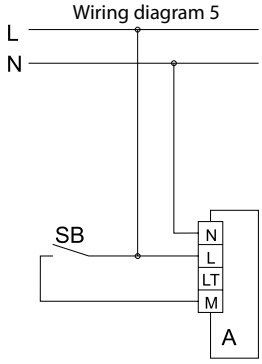

The fan runs at the first speed with the closed switch SB or is switched off when the switch is open. As the relative humidity level in the room increases, the fan switches automatically on to the second speed and run so till the humidity level drops to the required value.

Wiring diagram 6

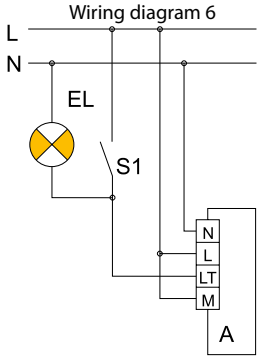

VNV-1(A, E) 80 N
VNV-1(A, E) 80 KP N
VNV-1(A, E) 80 KV N
VN-1(A, E) 80 N
VN-(A, E) 80 N
VNV-1(A, E) 80 KP2 N
VNV-1(A, E) 80 KV2 N
VNV-1(A, E) 80 KVK N
VN-1(A, E) 80 K N
VN-(A, E) 80 K N

The fan runs constantly at the first speed. As the relative humidity level in the room increases, the fan automatically switches on to the second speed and runs so till the humidity level drops to the required value. Additionally, the fan can be switched on to the second speed or switched off manually with S1 switch parallel with the light in the room. Turn-on delay time for the second speed is 50 seconds.

Wiring diagram 7

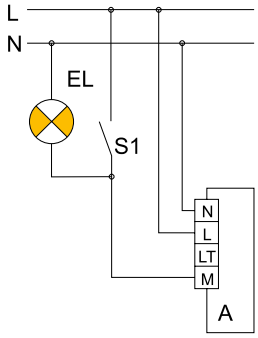

The fan runs at the first speed if the light in the room is turned on with switch S1 or is switched off if the light is turned off.
As the relative humidity level in the room increases, the fan switches automatically to the second speed and runs so till humidity level drops to the required value regardless to S1 position.

Wiring diagram 8

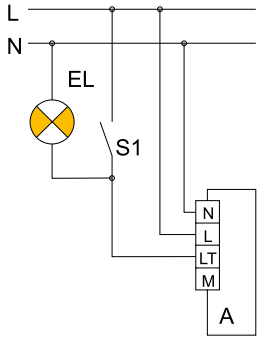

The fan is switched off in the starting position. As the relative humidity level in the room increases, the fan switches automatically to the second speed and runs so till the humidity level drops to the required value. Additionally the fan can be switched on to the second speed manually with switch S1 or switched off parallel with the light in the room. Turn-on delay time for the second speed makes 50 seconds.

GUARANTEED QUALITY

VN series fans comply with the requirements of regulatory documents on safety and electromagnetic compatibility, which is confirmed by certificates and conclusions of quality and conformity.

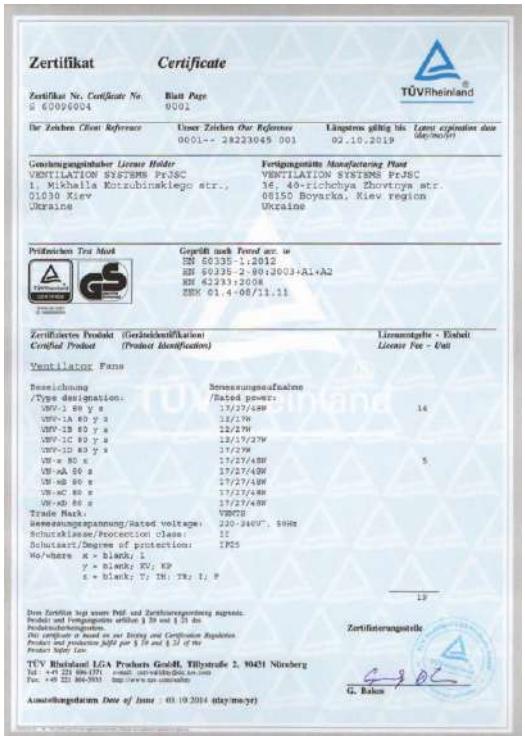

Zertifikat *Certificate*

TÜVRheinland

Zertifikat Nr. *Certificate No.* S 60096004 — Blatt *Page* 0001

Ihr Zeichen *Client Reference* — Unser Zeichen *Our Reference* 0001-- 28223045 001 — Längstens gültig bis *Latest expiration date* (day/mo/yr) 02.10.2019

Genehmigungsinhaber *Licence Holder*
VENTILATION SYSTEMS PrJSC
1, Mikhaila Kotzubinskiego str.,
01030 Kiev
Ukraine

Fertigungsstätte *Manufacturing Plant*
VENTILATION SYSTEMS PrJSC
36, 40-richchya Zhovtnya str.
08150 Boyarka, Kiev region
Ukraine

Prüfzeichen *Test Mark*

Geprüft nach *Tested acc. to*
EN 60335-1:2012
EN 60335-2-80:2003+A1+A2
EN 62233:2008
ZEK 01.4-08/11.11

Zertifiziertes Produkt (Geräteidentifikation) *Certified Product* (*Product Identification*) — Lizenzentgelte - Einheit *License Fee - Unit*

Ventilator Fans

Bezeichnung /Type designation:	Bemessungsaufnahme /Rated power:	
VNV-1 80 y z	17/27/48W	14
VNV-1A 80 y z	12/17W	
VNV-1B 80 y z	12/27W	
VNV-1C 80 y z	12/17/27W	
VNV-1D 80 y z	17/27W	
VN-x 80 z	17/27/48W	5
VN-xA 80 z	17/27/48W	
VN-xB 80 z	17/27/48W	
VN-xC 80 z	17/27/48W	
VN-xD 80 z	17/27/48W	
Trade Mark:	VENTS	
Bemessungsspannung/Rated voltage:	220-240V~, 50Hz	
Schutzklasse/Protection class:	II	
Schutzart/Degree of protection:	IP25	

No/where x = blank; 1
y = blank; KV; KP
z = blank; T; TH; TR; I; F

19

Dem Zertifikat liegt unsere Prüf- und Zertifizierungsordnung zugrunde.
Produkt und Fertigungsstätte erfüllen § 20 und § 21 des Produktsicherheitsgesetzes.
This certificate is based on our Testing and Certification Regulation.
Product and production fulfill per § 20 and § 21 of the Product Safety Law.

Zertifizierungsstelle

TÜV Rheinland LGA Products GmbH, Tillystraße 2, 90431 Nürnberg
Tel.: +49 221 806-1371 e-mail: [illegible]
Fax: +49 221 806-3933 http://www.tuv-rheinland.de

G. Balen

Ausstellungsdatum *Date of Issue* : 03.10.2014 (day/mo/yr)

2024-01

The catalogue information is for reference only.

VENTS reserves the rights to modify any of its products' features, designs, components and specifications at any time and without notice to maintain the development and quality of manufactured goods.